FRCM-NB1 - NB-IoT compatible, lighting panel control and monitoring unit

Installed inside the feeder pillar, it is designed to provide autonomous operation for street lighting installations and to carry out three phase measurements and analysis of electrical parameters in street lighting grids.

- Specially designed and optimized for LPWA networks.
- VPN security with AES128-bit encryption and key rotation.
- Bandwidth efficient with minimal communication requirements.
- Autonomous operation based on predefined astronomic calendar and/or external light level sensor (digital INPUT).
- Remote real-time ON/OFF control.
- Remote monitoring of grid parameters in street lighting grids: per phase voltage, current, frequency, power factor, active/ reactive/ apparent power, daily active/ reactive energy consumption.
- Configuration options for: current transformer ratio, voltage/power thresholds and daytime/ nighttime consumption thresholds.
- LCD for displaying electrical parameters and device status.
- GPS for exact location and time.
- Maintenance switch for local manual override (AUTO/ON/OFF).
- Inputs: 2 x Digital INPUT.
- Output: 1 x Dry contact relay output (230V, max 3A).
- Designed lifetime: 10+ years.
- TALQv2 certified solution.

Subject to change without notice ©inteliLIGHT

DIMENSIONS (mm):

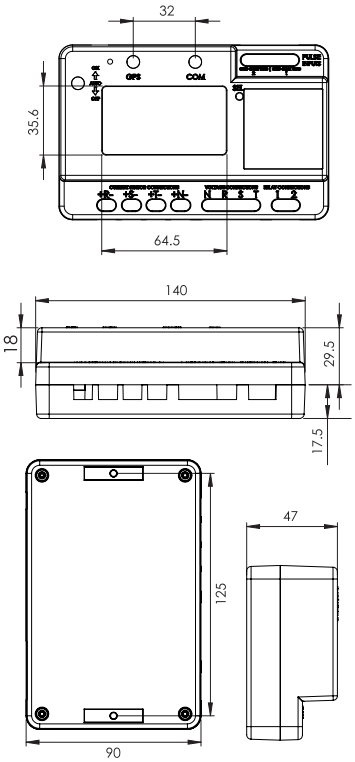

CERTIFICATIONS:

CE

	FRCM-NB1
Power supply	85- 260VAC / 50-60 Hz
Local interface	USB
Network interface	NB-IoT
Supported frequencies	worldwide
Internet protocol version	IPv4/IPv6
Display	LCD
Firmware update	OTA (over the air)
GNSS	Geolocation and precision time (GPS, GLONASS, BeiDou, Galileo and QZSS)
Security	AES128-bit encryption and key rotation per session (AES256-bit optional)
Surge protection	max 6kA (IEC 61000-4-5)
Internal scheduling memory	16 events (daily / weekdays / weekends / fixed date / exceptions)
Measurement accuracy	MID grade (±1%)
Power consumption	Max. 10 W
Precision Real Time Clock (RTC)	Yes, battery operated
Battery operation time	up to 2 hours
Input	• R, S, T voltage inputs • R, S, T, N current inputs • 2 x Digital input
Power network type	Three phase electric network and Neutral
Current transformers	Standard X:5, where X is user definable
Digital input	2x Dry contact relays or active inputs 5-12V (any combination)
Output	1 x Dry contact relay (230V, 2-16A depending on load type)
Light sensor	Optional- externally connected
Connectors	• Voltage (R,S,T,N) • Current (R,S,T,N) • RF / GPS / USB
Grid connectors	2.5 mm² terminals
Antennas	2 x SMA
Ingress protection	IP20 (IEC 60529) (optional IP67 external housing)
Operating temperature	-25°C to + 70°C
Operating humidity	95% non-condensing
Weight	320 ± 5 g
Dimensions (L x W x H)	138 x 90 x 47 mm
Mounting	DIN RAIL
Compliant standards	• RED Directive: LVD Directive & protection of health (EN IEC 62368-1, EN IEC 62479), EMC Directive (ETSI EN 301 489-1, ETSI EN 301 489-52), Efficient use of radio spectrum (ETSI EN 301 908-1, ETSI EN 301 908-13, ETSI EN 303 413) • RoHS Directive • Environmental Testing: EN 60068-2-1, EN 60068-2-2
Certifications	CE

MEASURED PARAMETERS:

- voltage
- current
- active power
- reactive power
- apparent power
- active energy
- reactive energy
- power factor
- frequency

CONFIGURABLE PARAMETERS:

- current transformer ratio
- voltage/power / current thresholds
- daytime/ nighttime consumption threshold

ALARMS MONITORED:

- over/ under voltage detection
- over/ under power detection
- over/ under current detection
- unusual daytime/nighttime consumption
- phase failure
- cabinet door open sensor

ELECTRICAL CONNECTIONS:

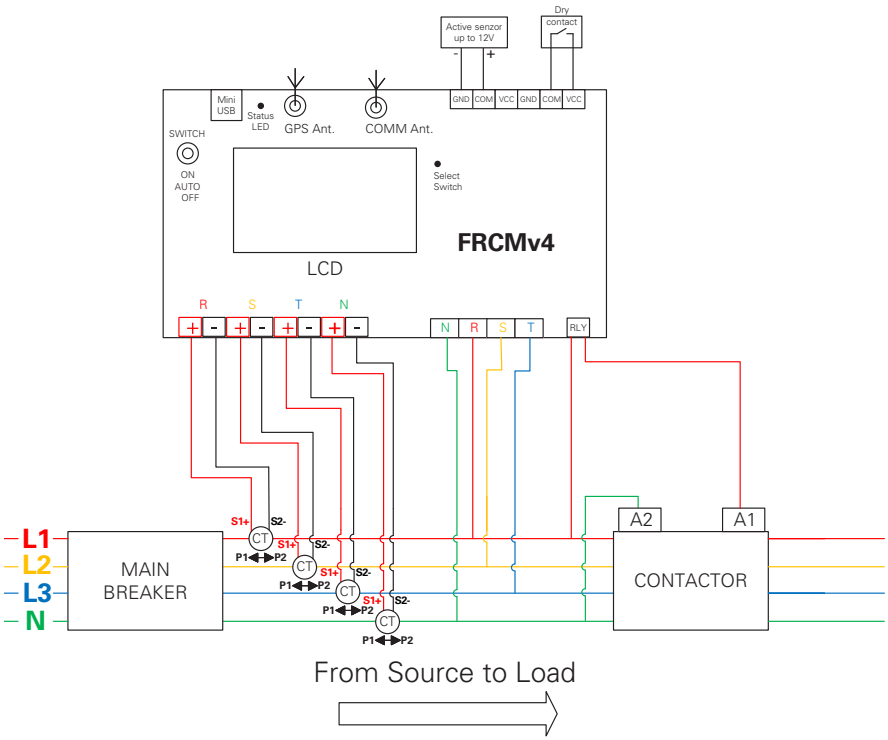

Subject to change without notice ©inteliLIGHT